Parts Manual

MS720

Side Discharge Finish Mower

VENTRAC.COM

Revised 02/04/26
09.20042 Rev. 08

500 Venture Drive
Orrville Oh 44667
www.ventrac.com

Serial Number Description

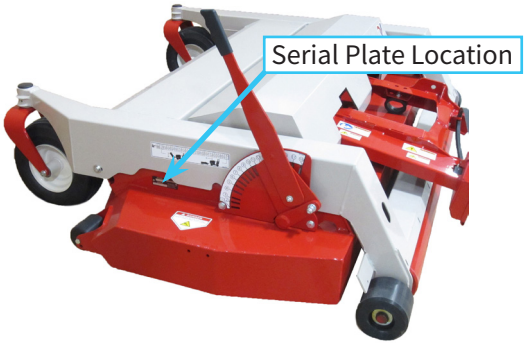

Notes

- If any component requires replacement, use only original Ventrac replacement parts.
- When ordering new components, be sure to order all required safety decals. All current safety decals must be affixed to the replacement components prior to installation of the component.

TABLE OF CONTENTS

PARTS **PAGE 4**

Main Frame, Discharge Chute & Baffle, Front Anti-Scalp Rollers 4
Carrier Frame & Wheels 6
Wheel Components 8
Hitch Arms 10
Drive Shaft & Attachment Belt 12
Main Deck Belt, Pulleys, & Belt Tensioner 14
Spindles & Blades 16
Rear Roller 18
Height Adjust Linkage & Deck Slides 20
Main Deck Cover Shield 22
70.8164 Mulch Kit 24
70.8163 & 70.8214 Hydraulic Flip Up Kit 26

ILLUSTRATED DRAWING
Main Frame, Discharge Chute & Baffle, Front Anti-Scalp Rollers

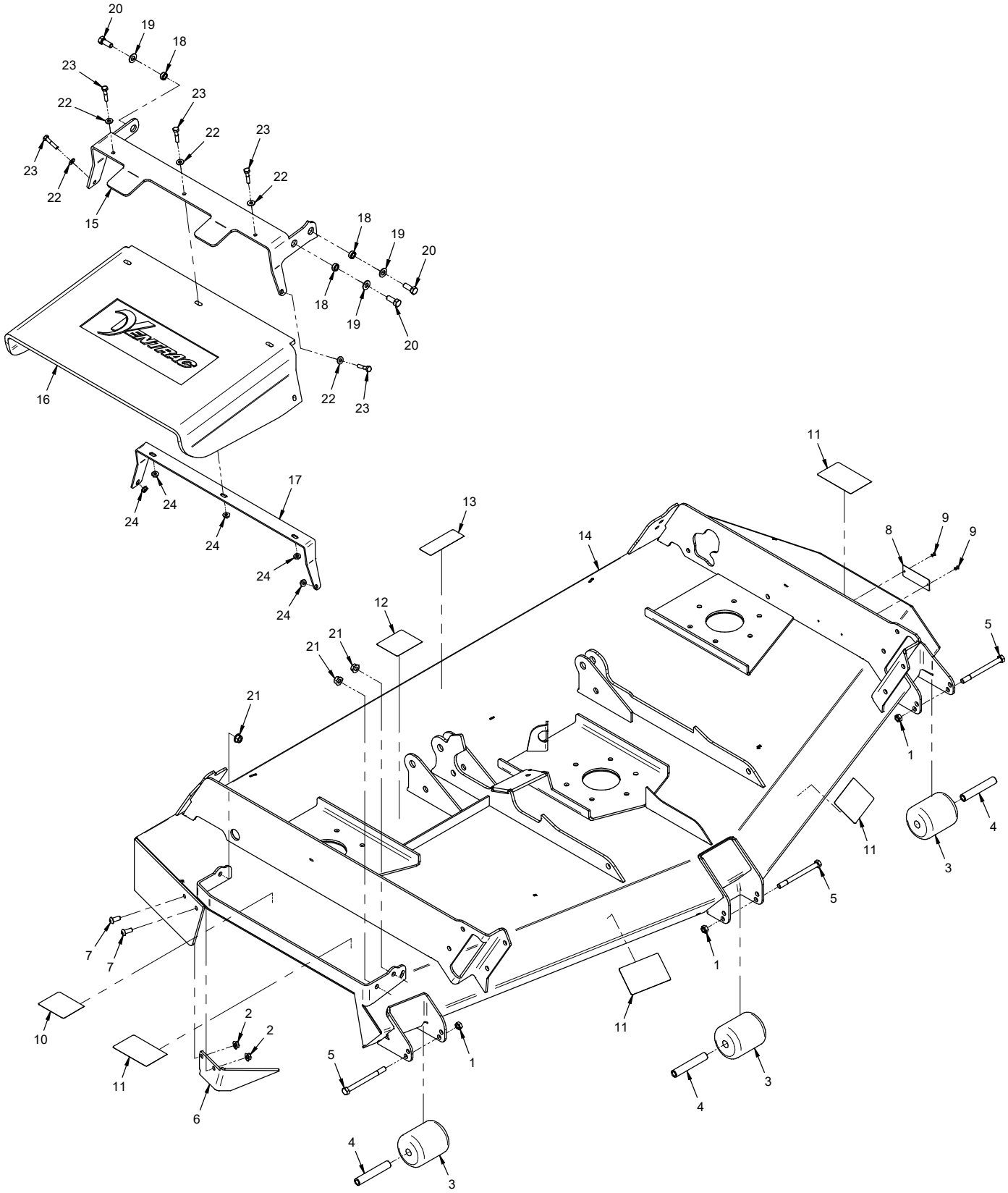

Use only original Ventrac replacement parts.

PARTS

Main Frame, Discharge Chute & Baffle, Front Anti-Scalp Rollers

REF.	PART NO.	DESCRIPTION	QTY.
1	99.A06	Locknut, Stover 3/8-16 USS	3
2	99.SF05	Nut, SRF 5/16-18 USS	2
3	50.0047	Roller, Front 3” Dia X 3-1/2”	3
4	50.0046	Tube, Axle Front Roller	3
5	90.0636	Bolt, 3/8-16 USS x 4-1/2	3
6	60.1292	Baffle, Discharge	1
7	99.0506	Bolt, 5/16-18 x 3/4 BSCS	2
8	N/A	Plate, Ventrac Serial Number	1
9	04.0003	Rivet, Pop 1/8 X 3/8 SS	2
10	00.0122	Decal, Thrown Object Hazard (Serial # 01001-05588)	1
10	00.0627	Decal, Thrown Object Hazard (Serial # 05589-)	1
11	00.0123	Decal, Keep Hands & Feet Clear (Serial # 01001-05588)	4
11	00.0628	Decal, Cutting Hazard Mower Blade (Serial # 05589-)	4
12	00.0062	Decal, Danger Shield Missing (Serial # 01001-05588)	1
12	00.0625	Decal, Shield Missing (Serial # 05589-)	1
13	00.0102	Decal, Danger - Pinching Hazard (Serial # 01001-05588)	1
13	00.0620	Decal, Pinching or Crushing Hazard (Serial # 05589-)	1
14	62.1451	Frame, Deck Weldment MS720	1
15	64.1933	Bracket, Discharge Chute	1
16	44.0384	Rubber, MS Mower Chute	1
17	64.1942	Strap, Discharge Chute	1
18	64.0602	Bushing, 3/8 x 5/8 x .265	3
19	95.06	Washer, Flat 3/8 SAE	3
20	90.0608	Bolt, 3/8-16 USS x 1	3
21	99.SF06	Nut, SRF 3/8-16 USS	3
22	95.04	Washer, Flat 1/4 SAE	5
23	90.0410	Bolt, 1/4-20 USS x 1/1-4”	5
24	99.SF04	Nut, SRF 1/4-20 USS	5

Use only original Ventrac replacement parts.

ILLUSTRATED DRAWING
Carrier Frame & Wheels

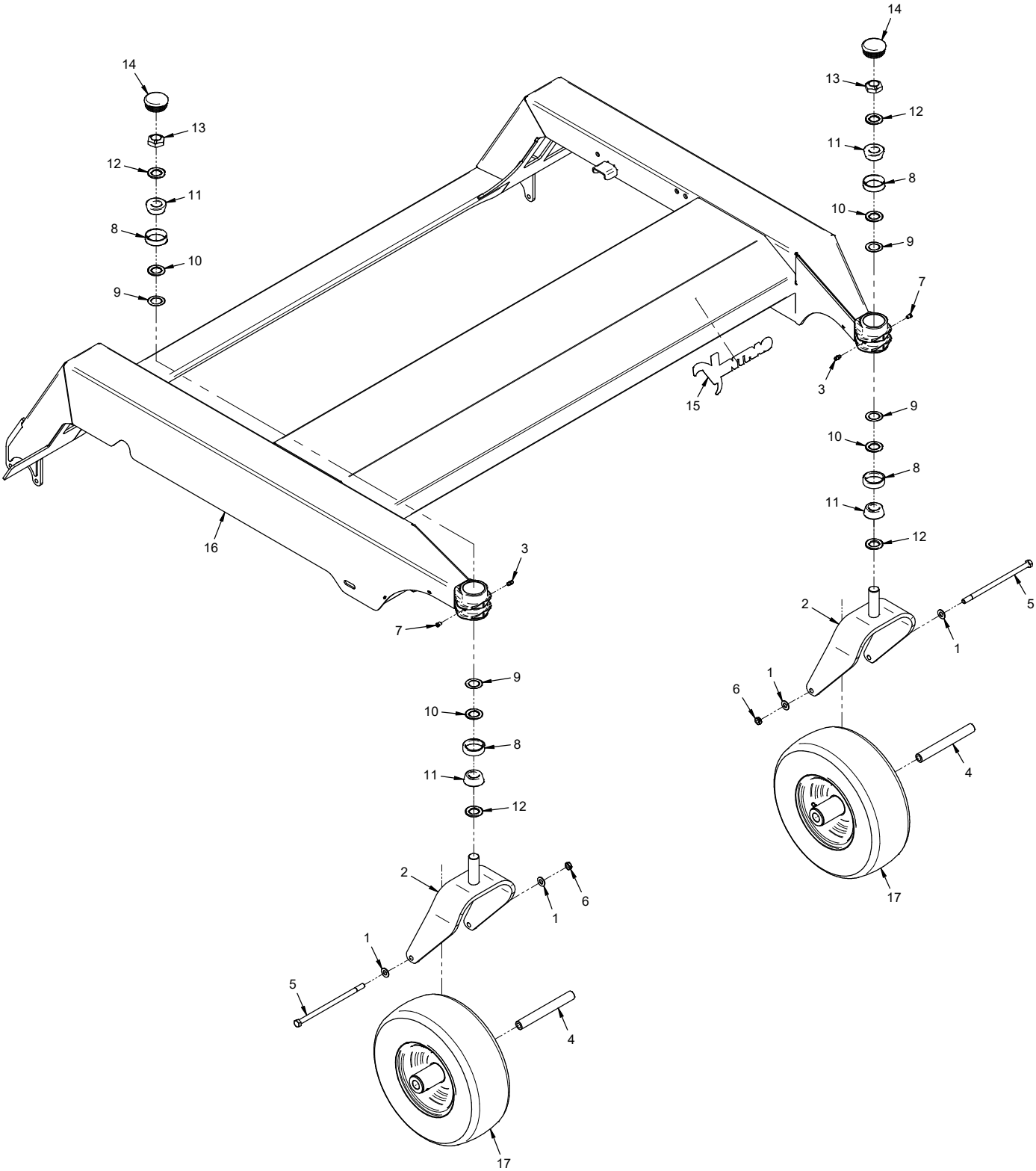

Use only original Ventrac replacement parts.

Carrier Frame & Wheels

REF.	PART NO.	DESCRIPTION	QTY.
1	95.06	Washer, Flat 3/8 SAE	4
2	50.0195	Yoke, Caster 13” Wheel	2
3	29.GF0001	Grease Ftg, 1/4 SAE ST	2
4	50.0050	Tube, Swivel Axle	2
5	90.0660	Bolt, 3/8-16 USS x 7-1/2	2
6	99.A06C	Locknut, Center 3/8-16	2
7	29.GF0011	Grease Ftg, Plug 1/4-28	2
8	55.LM12710	Bearing, Cup	4
9	85.B0101	Bushing, .005 Spacer	4
10	85.B0099	Bushing, .875ID x 1.375OD x .120T	4
11	55.LM12749LA2	Bearing, Taper Roller Cone	4
12	99.B0119	Washer, Mach 7/8 x 1-3/8 x 10 GA	4
13	99.M0047	Locknut, Stover M22 X 1.5 ZP	2
14	05.0172	Plug, Ribbed Black LDPE.	2
15	00.0383	Decal, Ventrac	1
16	62.1450	Frame, Main Carrier MS720	1
17	53.0155	Wheel, Asm 13 x 5 x 6 Caster (white rim) (Serial # 01001-05108)	2
17	53.0148	Wheel, Asm 13x5x6 Rib Flatfree (Optional - white rim)	2
17	53.0216	Wheel, Asm 13 x 5 x 6 Caster (white rim) (Serial # 05109 -05264)	2
17	53.0213	Wheel, Asm 13 x 5 x 6 Caster (black rim) (Serial # 05265-)	2
17	53.0214	Wheel, Asm 13 x 5 x 6 Caster (Optional - black rim)	2

Use only original Ventrac replacement parts.

ILLUSTRATED DRAWING
Wheel Components

53.0155 - Standard White Rim (Serial # 01001-05108)

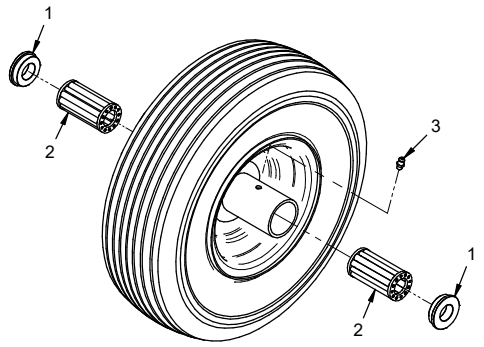

53.0148 - Optional Flatfree White Rim

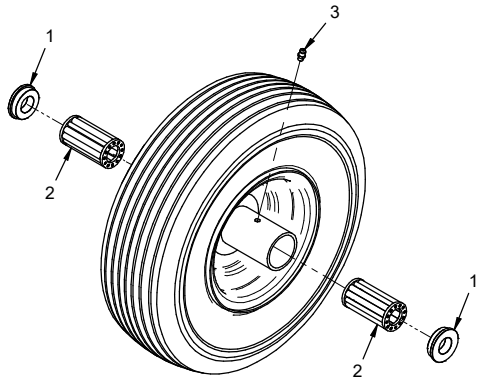

53.0216 - Standard White Rim (Serial # 05109-05264)

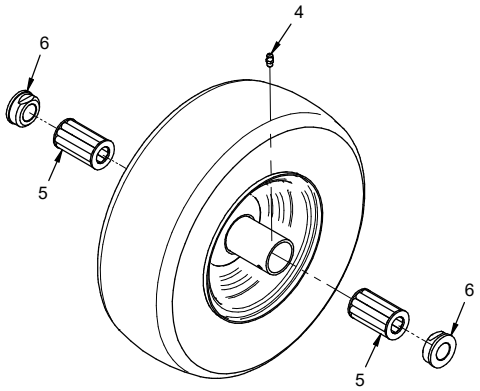

53.0213 - Standard Black Rim (Serial # 05265-)

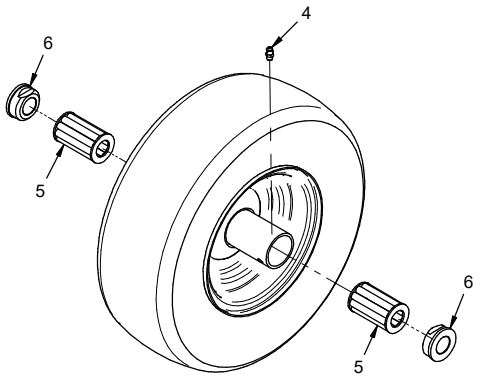

53.0214 - Optional Flatfree Black Rim

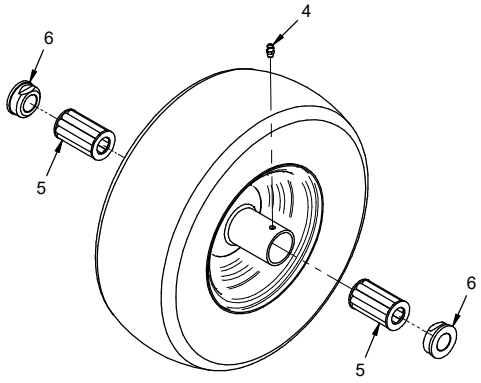

Use only original Ventrac replacement parts.

Wheel Components

REF.	PART NO.	DESCRIPTION	QTY.
1	55.0072	Bearing, Retainer 3/4”	2
2	55.0088	Bearing, Roller Replacement	2
3	29.GF0001	Grease Ftg, 1/4 SAE ST	1
4	29.GF0001	Grease Ftg, 1/4 SAE ST	1
5	55.0116	Bearing, Roller 2.25” Long	2
6	55.0114	Retainer, Roller Bearing 3/4”	2

Use only original Ventrac replacement parts.

ILLUSTRATED DRAWING
Hitch Arms

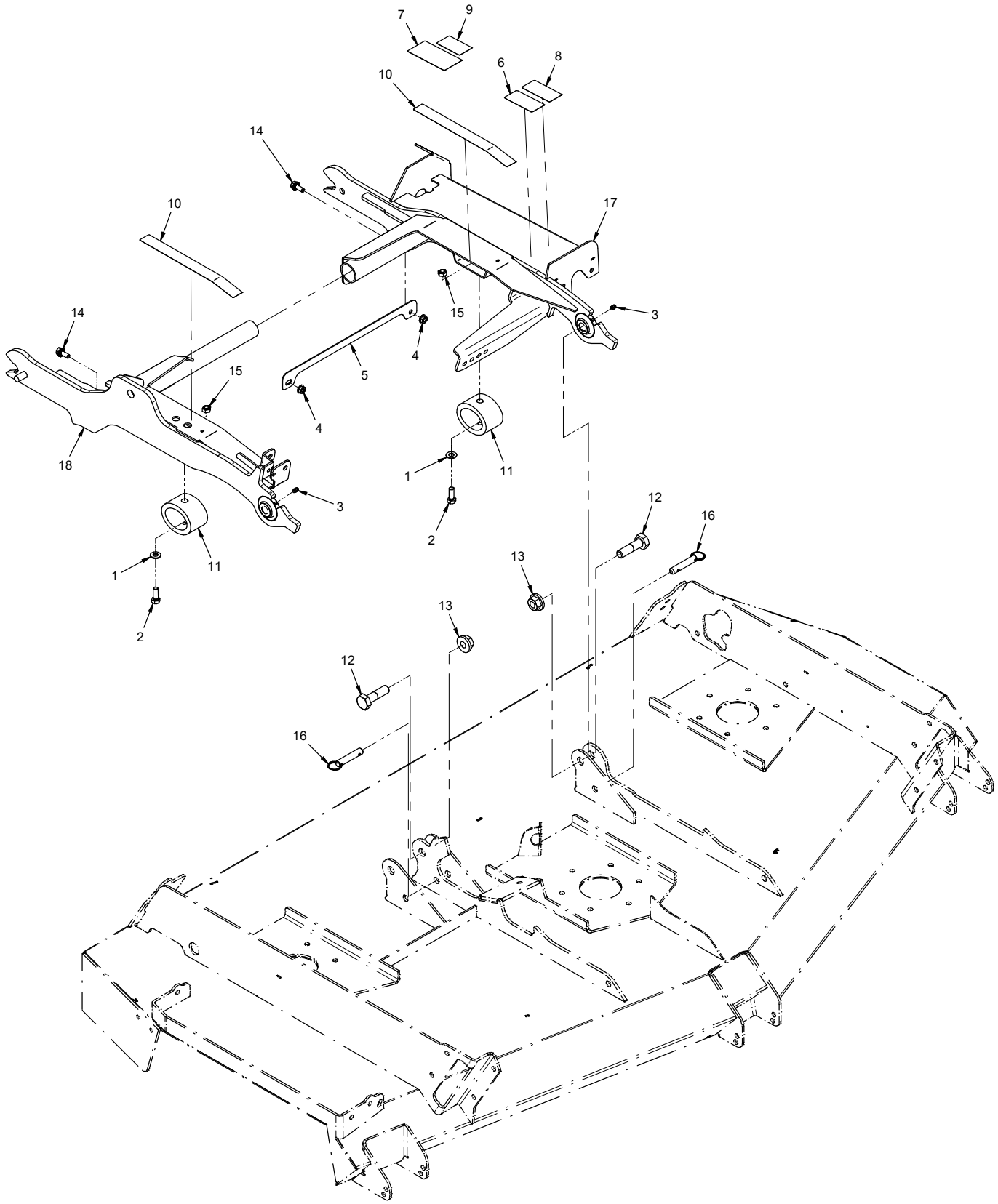

Use only original Ventrac replacement parts.

Hitch Arms

REF.	PART NO.	DESCRIPTION	QTY.
1	95.06	Washer, Flat 3/8 SAE	2
2	90.0608	Bolt, 3/8-16 USS x 1	2
3	29.GF0001	Grease Ftg, 1/4 SAE ST	2
4	99.SF05	Nut, SRF 5/16-18 USS	2
5	64.1934	Brace, Hitch Arm Spacing	1
6	00.0217	Decal, Warning Read Owners Man (Serial # 01001-05588)	1
6	00.0619	Decal, Read Operator's Manual (Serial # 05589-)	1
7	00.0220	Decal, General Safety (Serial # 01001-05588)	1
8	00.0219	Decal, Warning Do Not Reach (Serial # 01001-05588)	1
8	00.0632	Decal, Moving Parts Hazard (Serial # 05589-)	1
9	00.0216	Decal, Warning Moving Parts (Serial # 01001-05588)	1
9	00.0631	Decal, Finger/Hand Entanglement (Serial # 05589-)	1
10	00.0427	Decal, Wear Resistant	2
11	05.0169	Bumper, Elastomer 1300 LBS PF	2
12	99.K0111	Bolt, 5/8-11 X 2-1/4 Grd A325	2
13	99.E0094	Locknut, 5/8-11 Flanged Stover	2
14	99.SF0506	Bolt, SRF 5/16-18 USS X 3/4	2
15	99.A06	Locknut, Stover 3/8-16 USS	2
16	03.0007	Pin, Ball 1/2 x 1.8"	2
17	62.1452	Hitch, Arm Left MS720	1
18	62.1453	Hitch, Arm Right MS720	1

Use only original Ventrac replacement parts.

ILLUSTRATED DRAWING
Drive Shaft & Attachment Belt

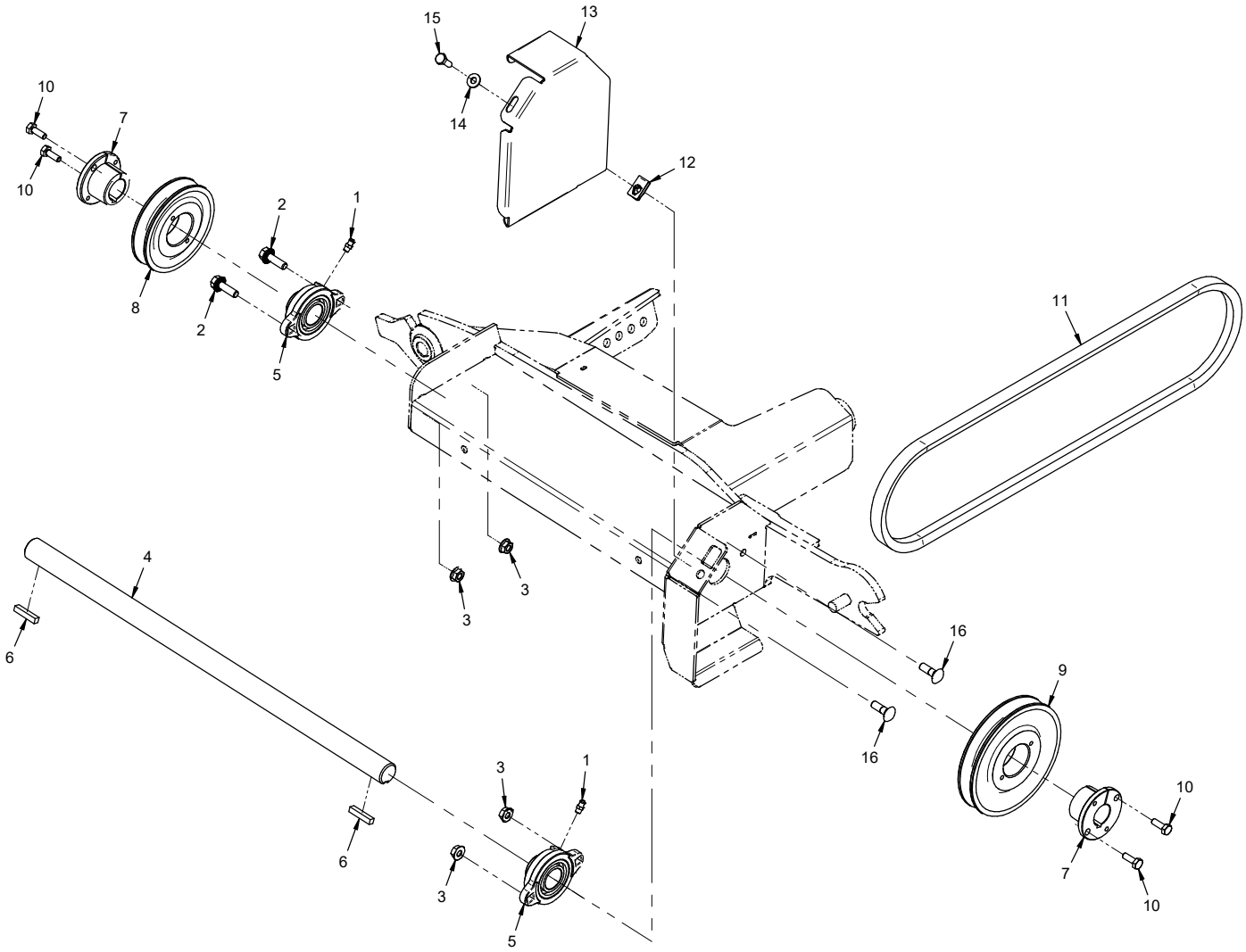

Use only original Ventrac replacement parts.

Drive Shaft & Attachment Belt

REF.	PART NO.	DESCRIPTION	QTY.
1	29.GF0001	Grease Ftg, 1/4 SAE ST	2
2	99.SF0508	Bolt, SRF 5/16-18 USS X 1	2
3	99.SF05	Nut, SRF 5/16-18 USS	4
4	80.0389	Shaft, Hitch Arm	1
5	55.FB16016-1	Bearing, Flange Block 1”	2
6	85.K0410	Key, 1/4 X 1-1/4	2
7	83.H16S	Bushing, 1” Split 1/4” Key	2
8	83.BK45H	Pulley, 4.5” H-Bush	1
9	83.BK55H	Pulley, 5.5” H-Bushing	1
10	90.0406	Bolt, 1/4-20 USS x 3/4”	4
11	81.B045	Belt, B45	1
12	99.E0046	Nut, “U” 1/4-20 Extruded	1
13	60.0665	Shield, Drive Pulley	1
14	95.04	Washer, Flat 1/4 SAE	1
15	90.0406	Bolt, 1/4-20 USS x 3/4”	1
16	99.SF0508	Bolt, SRF 5/16-18 USS X 1 (Serial # 01001-04513)	2
16	97.0508	Bolt, Carriage 5/16-18 x 1 (Serial # 04514-)	2

Use only original Ventrac replacement parts.

ILLUSTRATED DRAWING
Main Deck Belt, Pulleys, & Belt Tensioner

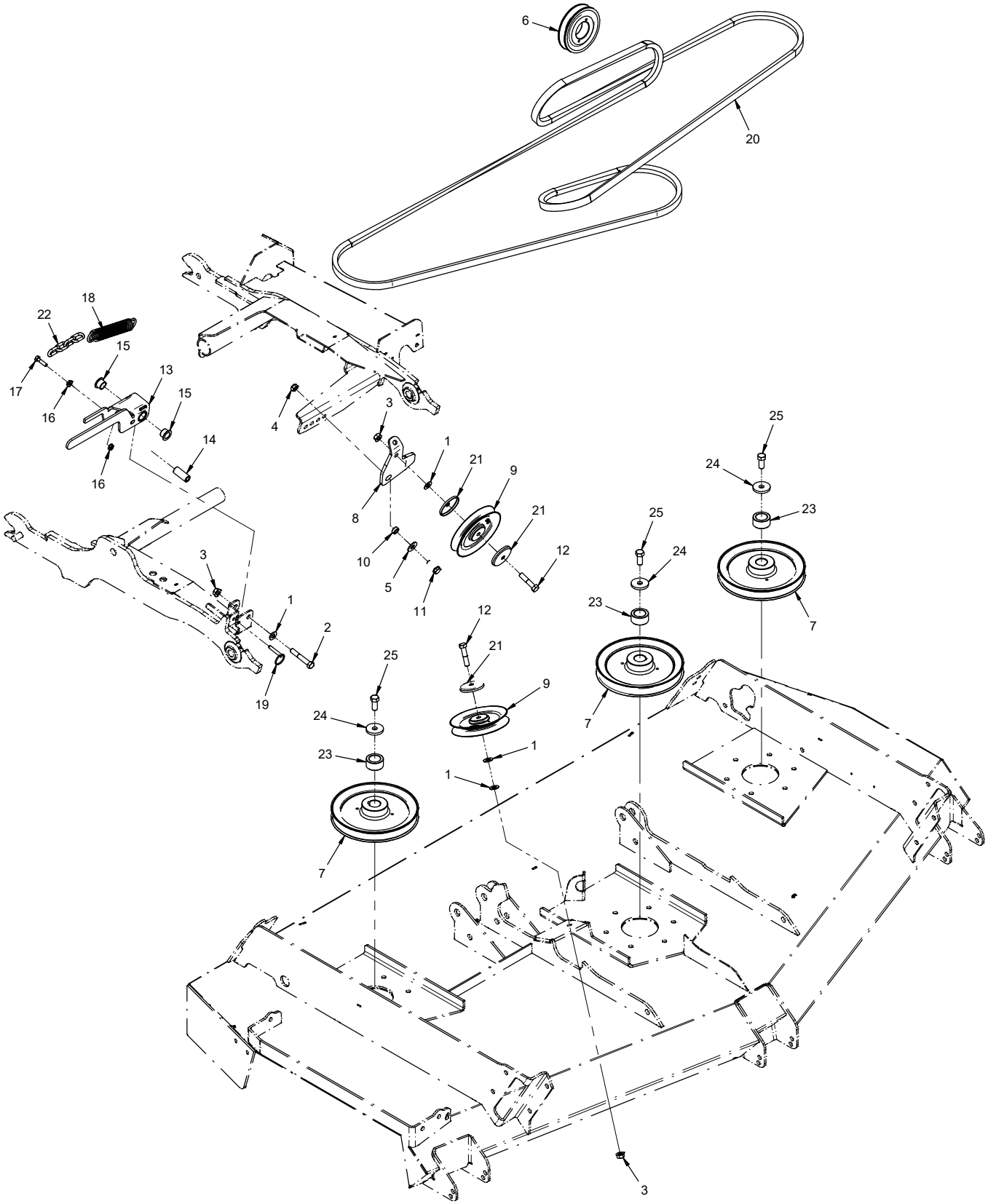

Use only original Ventrac replacement parts.

Main Deck Belt, Pulleys, & Belt Tensioner

REF.	PART NO.	DESCRIPTION	QTY.
1	95.06	Washer, Flat 3/8 SAE	4
2	90.0618	Bolt, 3/8-16 USS x 2-1/4	1
3	99.SF06	Nut, SRF 3/8-16 USS	3
4	99.A06	Locknut, Stover 3/8-16 USS	1
5	94.06	Washer, Flat 3/8 USS	1
6	83.BK45H	Pulley, 4.5” H-Bush	1
7	83.0080	Pulley, 7-1/2, 25MM STR Bore	3
8	40.0399	Idler Arm, Belt Tension	1
9	83.0031	Pulley, V-Idler 5-1/16 X 3/8ID	2
10	64.0602	Bushing, 3/8 x 5/8 x .265	1
11	99.SF0608	Bolt, SRF 3/8-16 USS x 1	1
12	90.0614	Bolt, 3/8-16 USS x 1-3/4	2
13	70.8218	Kit, Belt Tension/Cylinder Lock (2 parts)	1
14	64.1936	Bushing, Belt Tension Pivot	1
15	85.B0088	Bushing, 5/8 ID X 3/4 OD X 1/2	2
16	99.SF04	Nut, SRF 1/4-20 USS	2
17	90.0408	Bolt, 1/4-20 USS x 1”	1
18	41.0048	Spring, Ext. 1 OD X 6	1
19	03.0022	Pin, Ball 1/4” x 1”	1
20	81.5001	Belt, B180 Custom	1
21	60.1056	Cover, Pulley	3
22	81.0160	Chain, 1/8 Plated x 4 Links	1
23	64.1976	Bushing, 1ID X 1.5OD X .750L	3
24	99.B0128	Washer, .323 ID x 1.50 OD (Serial # 01001-02297)	3
24	99.B0134	Washer, .448 ID x 1.50 OD (Serial # 02298-)	3
25	99.SF0508-8	Bolt, SRF 5/16-18 X 1 GR8 (Serial # 01001-02297)	3
25	91.0708-8	Bolt, 7/16-20 x 1 Gr8 (Serial # 02298-)	3

Use only original Ventrac replacement parts.

ILLUSTRATED DRAWING
Spindles & Blades

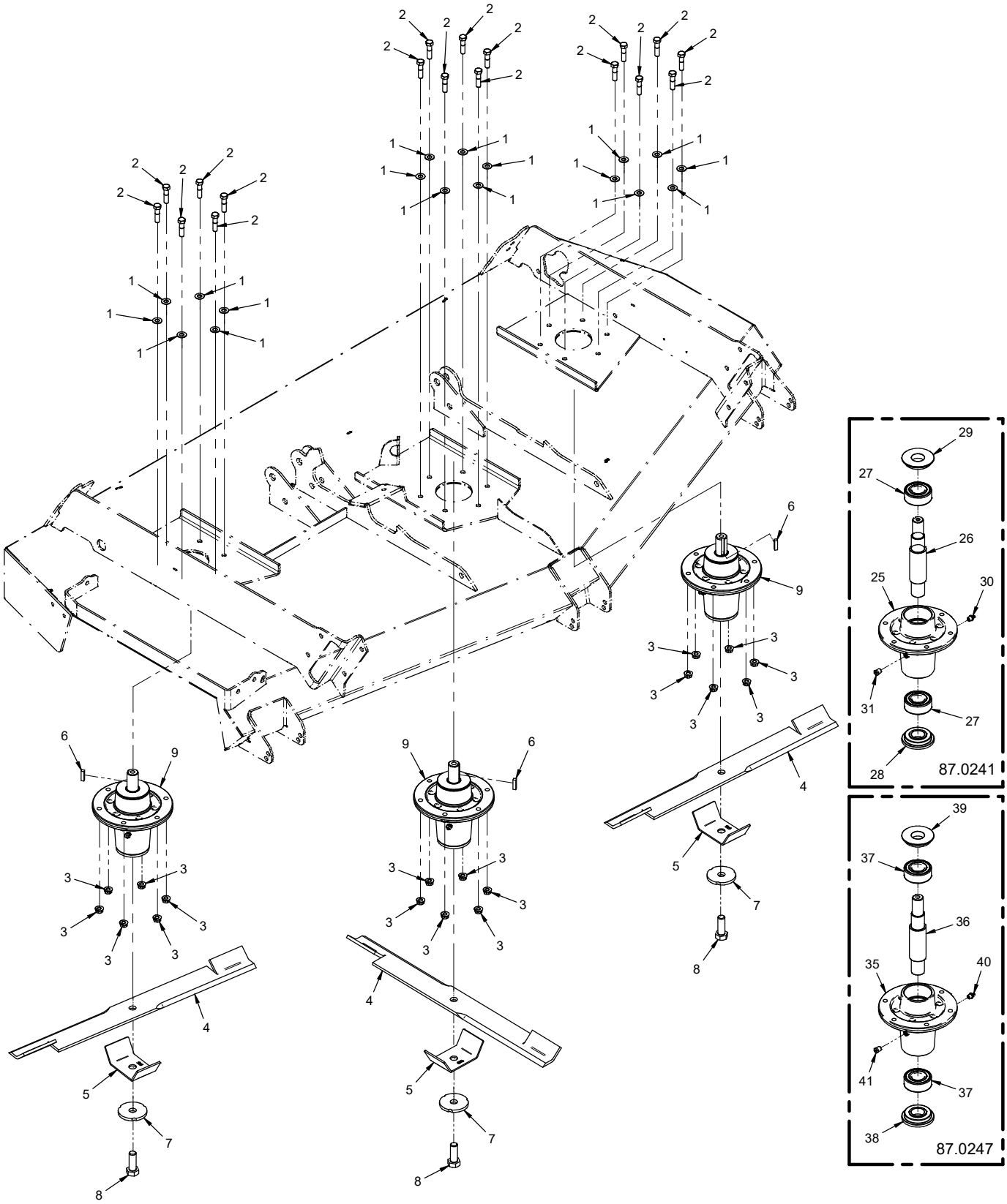

Use only original Ventrac replacement parts.

Spindles & Blades

REF.	PART NO.	DESCRIPTION	QTY.
1	95.06	Washer, Flat 3/8 SAE	18
2	90.0612	Bolt, 3/8-16 USS x 1-1/2	18
3	99.E0082	Nut, Locking Flange 3/8-16	18
4	79.0105	Blade, 25 X 5/8 RH S Highlift	3
4	79.0105-3	Blade, Box Set 3X, 79.0105 Highlift (Multi-Pack Option)	1
4	79.0104	Blade, 25 X 5/8 RH S Lowlift (Optional)	3
4	79.0104-3	Blade, Box Set 3X, 79.0104 Lowlift (Optional | Multi-Pack Option)	1
4	79.0107	Blade, 25 X 5/8 RH S Gator (Optional)	3
4	79.0107-3	Blade, Box Set 3X, 79.0107 Gator (Optional | Multi-Pack Option)	1
4	79.0106	Blade, 24-15/16x5/8 RH F Mulch (Optional)	3
4	79.0106-3	Blade, Box Set 3X, 79.0106 Mulch (Optional | Multi-Pack Option)	1
5	64.2003	Guard, Spindle/Anti-String	3
6	85.K0408	Key, 1/4 X 1	3
7	99.B0097	Washer, .635 ID X 2-1/2 OD 1/4	3
8	91.1014	Bolt, 5/8-18 SAE x 1-3/4	3
9	87.0241	Spindle, Asm HD RH (Serial # 01001-02297)	3
9	87.0247	Spindle, Asm HD Al RH (Serial # 02298-)	3
25	87.0241-1	Housing, Spindle AL	1
26	87.0241-2	Shaft, Spindle RH	1
27	55.0095	Bearing, Ball 30MM x 62MM	2
28	87.0224-3	Shield, Spindle Bottom	1
29	87.0225-3	Shield, Spindle Top	1
30	29.GF0004	Grease Ftg, 1/8 NPT St	1
31	29.GF0017	Fitting, Relief	1
35	87.0241-1	Housing, Spindle AL	1
36	87.0247-2	Shaft, Spindle RH	1
37	55.0095	Bearing, Ball 30MM x 62MM	2
38	87.0224-3	Shield, Spindle Bottom	1
39	87.0225-3	Shield, Spindle Top	1
40	29.GF0004	Grease Ftg, 1/8 NPT St	1
41	29.GF0017	Fitting, Relief	1

Use only original Ventrac replacement parts.

ILLUSTRATED DRAWING
Rear Roller

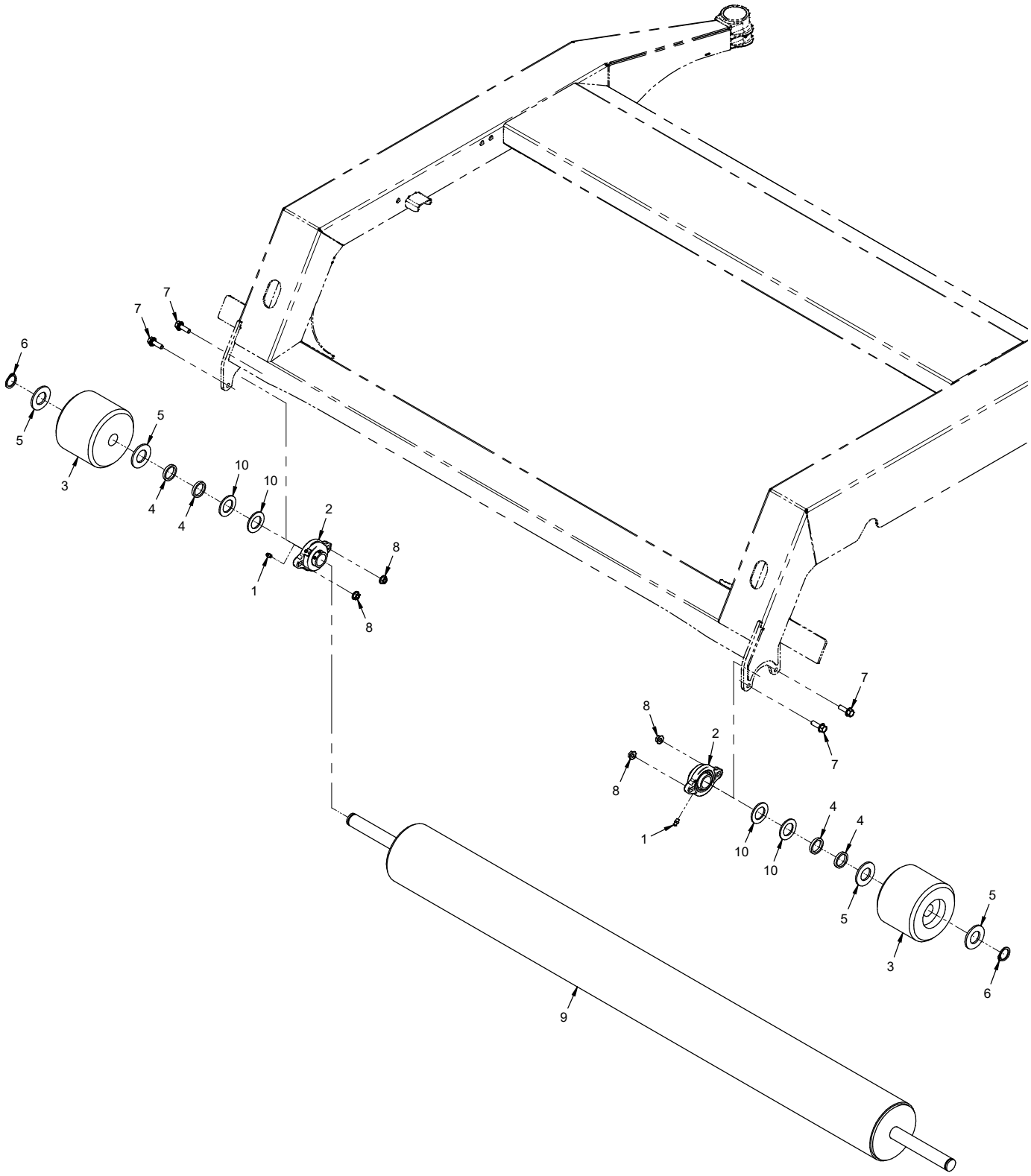

Use only original Ventrac replacement parts.

Rear Roller

REF.	PART NO.	DESCRIPTION	QTY.
1	29.GF0001	Grease Ftg, 1/4 SAE ST	2
2	55.FB16016-2	Bearing, 2 Bolt Flange 1” (Serial # 01001-04880)	2
2	55.FB16016-1	Bearing, Flange Block 1” (Serial # 04881-05442)	2
2	55.FB16016-2	Bearing, 2 Bolt Flange 1” (Serial # 05443-)	2
3	50.0194	Roller, End 5” Dia x 4” Long	2
4	64.1930	Spacer, Rear Roller End	4
5	95.16	Washer, Flat 1 SAE	4
6	04.0025	Snap Ring, Ext.1 Shft .078 Thk	2
7	99.SF0508	Bolt, SRF 5/16-18 USS X 1	4
8	99.SF05	Nut, SRF 5/16-18 USS	4
9	80.0388	Roller, Rear MS720	1
10	99.B0093	Washer, 1” ID x 1-1/2” OD 10GA (Serial # 04881-05442)	4

Use only original Ventrac replacement parts.

ILLUSTRATED DRAWING
Height Adjust Linkage & Deck Slides

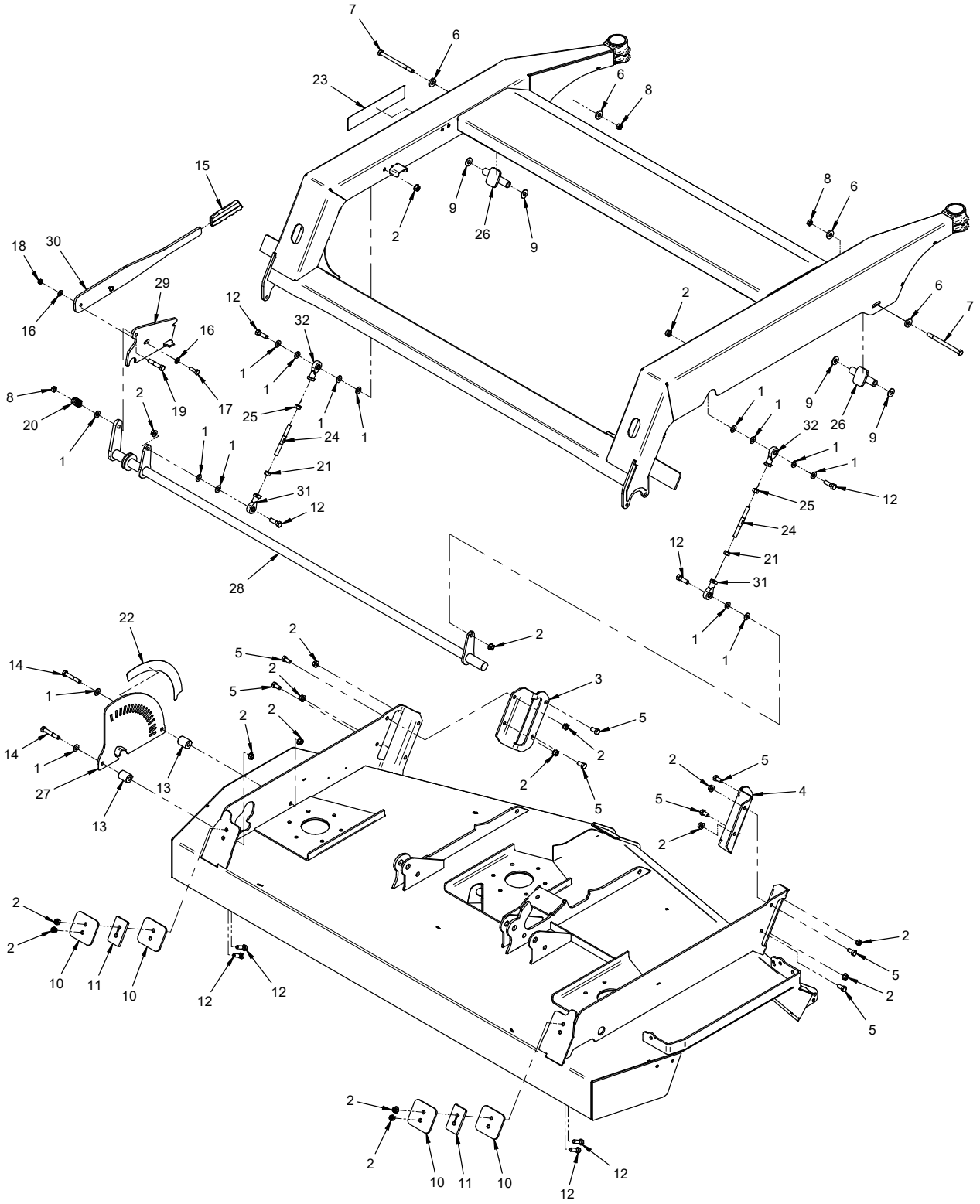

Use only original Ventrac replacement parts.

Height Adjust Linkage & Deck Slides

REF.	PART NO.	DESCRIPTION	QTY.
1	95.06	Washer, Flat 3/8 SAE	15
2	99.SF06	Nut, SRF 3/8-16 USS	18
3	64.1904	Bracket, Front Slide Left	1
4	64.1905	Bracket, Front Slide Right	1
5	90.0606	Bolt, 3/8-16 UNC x 3/4	8
6	99.G0014	Washer, 3/8 USS FW .165 Thk	4
7	90.0640	Bolt, 3/8-16 UNC x 5	2
8	99.A06	Locknut, Stover 3/8-16 UNC	3
9	94.06	Washer, Flat 3/8 USS	4
10	64.1179	Plate, Rear Slide Retainer	4
11	64.1181	Spacer, Rear Slide	2
12	90.0610	Bolt, 3/8-16 UNC x 1 1/4	8
13	64.0905	Tube, RD 7/16 X 1 X 1-1/4L	2
14	90.0618	Bolt, 3/8-16 UNC x 2-1/4	2
15	47.0086	Grip, Slip-On Handle - Black	1
16	95.05	Washer, Flat 5/16 SAE	2
17	90.0508	Bolt, 5/16-18 UNC x 1	1
18	99.A05	Locknut, Stover 5/16-18 UNC	1
19	90.0612	Bolt, Hex 3/8-16 UNC x 1-1/2 (Serial # 01001-01556)	1
19	90.0616	Bolt, 3/8-16 UNC x 2 (Serial # 01557-)	1
20	41.0039	Spring, Comp 9/16 OD x 5/8 LG (Serial # 01001-01556)	1
20	41.0119	Spring, Comp .785 OD x 1 LG (Serial # 01557-)	1
21	93.06	Nut, 3/8-24 UNF	2
22	00.0425	Decal, Cut Height Position	1
23	00.0426	Decal, Cut Height Position Key	1
24	42.0610-1	Rod, Thread 3/8-24 X 3.75 RH/LH ZP	2
25	99.E0114	Nut, 3/8-24 UNF LH ZP	2
26	64.1180	Tube, Front Slide	2
27	64.1961	PLATE, HEIGHT ADJUST SELECTOR	1
28	42.0579	Shaft, Ht Adj Crossbar MS720	1
29	64.1910	Bracket, Height Adjuster	1
30	64.1911	Lever, Height Adjuster	1
31	43.006	Rod End, 3/8 Spherical	2
32	43.006L	Rod End, 3/8 Spherical, LH Thrd	2

Use only original Ventrac replacement parts.

ILLUSTRATED DRAWING
Main Deck Cover Shield

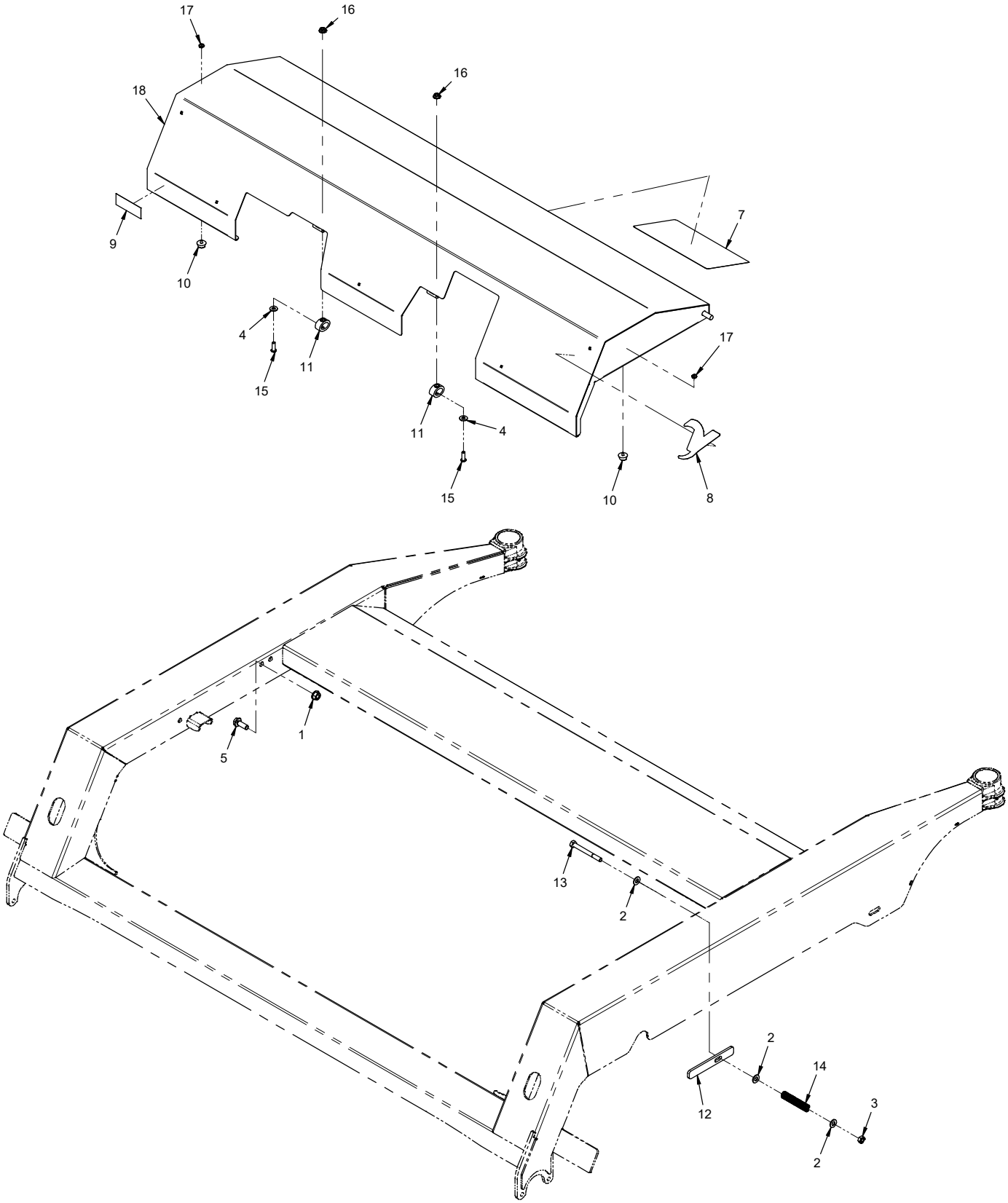

Use only original Ventrac replacement parts.

Main Deck Cover Shield

REF.	PART NO.	DESCRIPTION	QTY.
1	99.SF06	Nut, SRF 3/8-16 USS	1
2	95.05	Washer, Flat 5/16 SAE	3
3	99.A05	Locknut, Stover 5/16-18 USS	1
4	95.04	Washer, Flat 1/4 SAE	2
5	99.SF0608	Bolt, SRF 3/8-16 USS x 1	1
7	00.0428	Decal, Mower Maintenance	1
8	00.0192	Decal, V-Decal Die Cut Blue	1
9	00.0770	Decal, Made In USA.	1
10	05.0171	Bumper, Neoprene 60 Duro	2
11	05.0170	Bumper, Elastomer 125 Lbs PF	2
12	64.0682	Bracket, Shield Spring.	1
13	90.0528	Bolt, 5/16-18 USS x 3-1/2”.	1
14	41.0021	Spring, Comp 1/2 OD X 2-3/4 LG.	1
15	99.0406	Bolt, 1/4-20 x 3/4 BSCS	2
16	99.SF04	Nut, SRF 1/4-20 USS	2
17	99.E0104	Nut, Jam #8-32 Nylon Lock.	2
18	60.1268	Shield, Main Deck Cover MS720	1

Use only original Ventrac replacement parts.

ILLUSTRATED DRAWING
70.8164 Mulch Kit

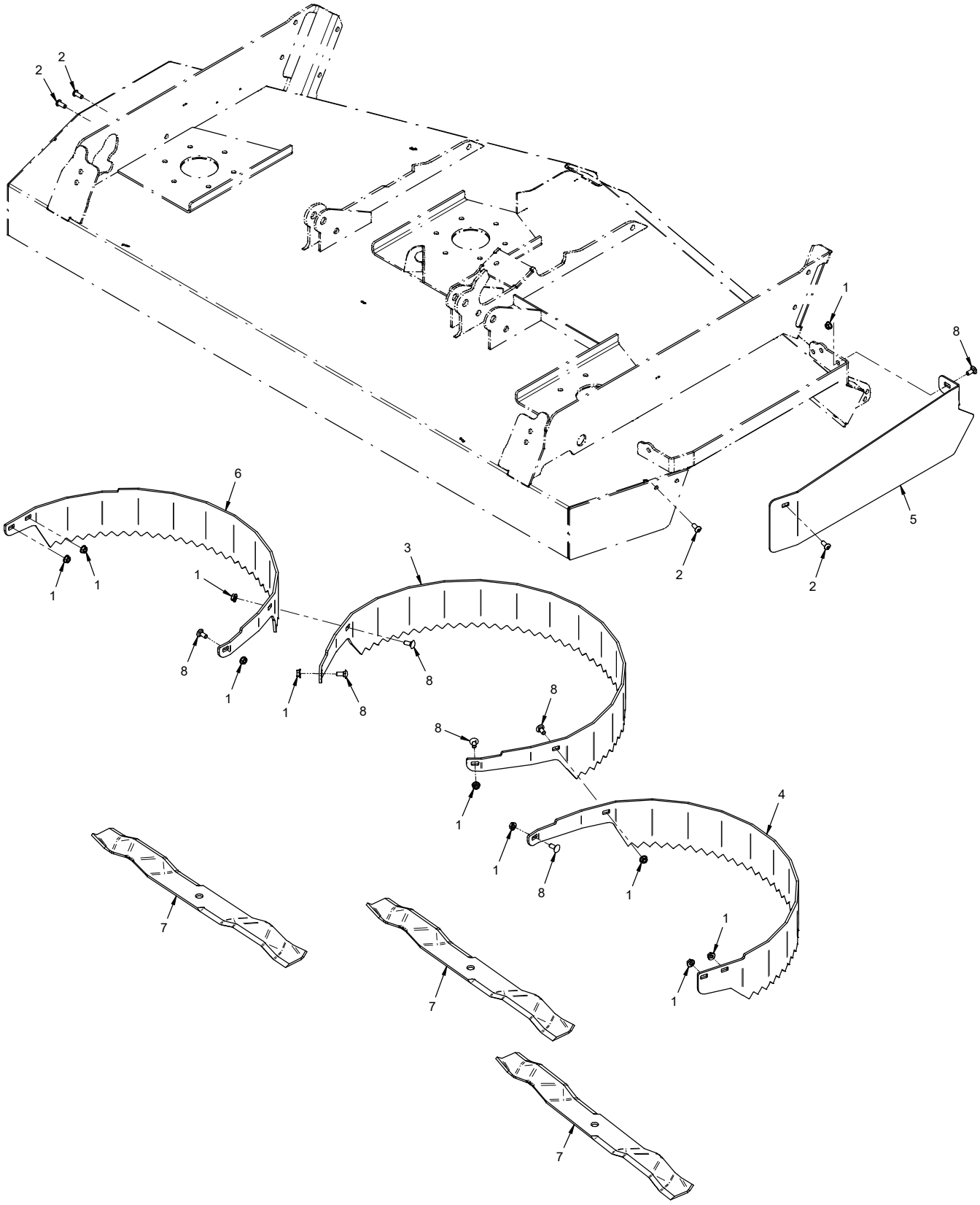

Use only original Ventrac replacement parts.

70.8164 Mulch Kit

REF.	PART NO.	DESCRIPTION	QTY.
1	99.SF05	Nut, SRF 5/16-18 USS	11
2	99.0506	Bolt, 5/16-18 x 3/4 BSCS	4
3	64.1970	Ring, Mulching Center	1
4	64.1971	Ring, Mulching Right	1
5	64.1982	Plate, Discharge End	1
6	64.1969	Ring, Mulching Left	1
7	79.0106	Blade, 24-15/16x5/8 RH F Mulch	3
8	97.0506	Bolt, Carriage 5/16-18 x 3/4	7

Use only original Ventrac replacement parts.

ILLUSTRATED DRAWING
70.8163 & 70.8214 Hydraulic Flip Up Kit

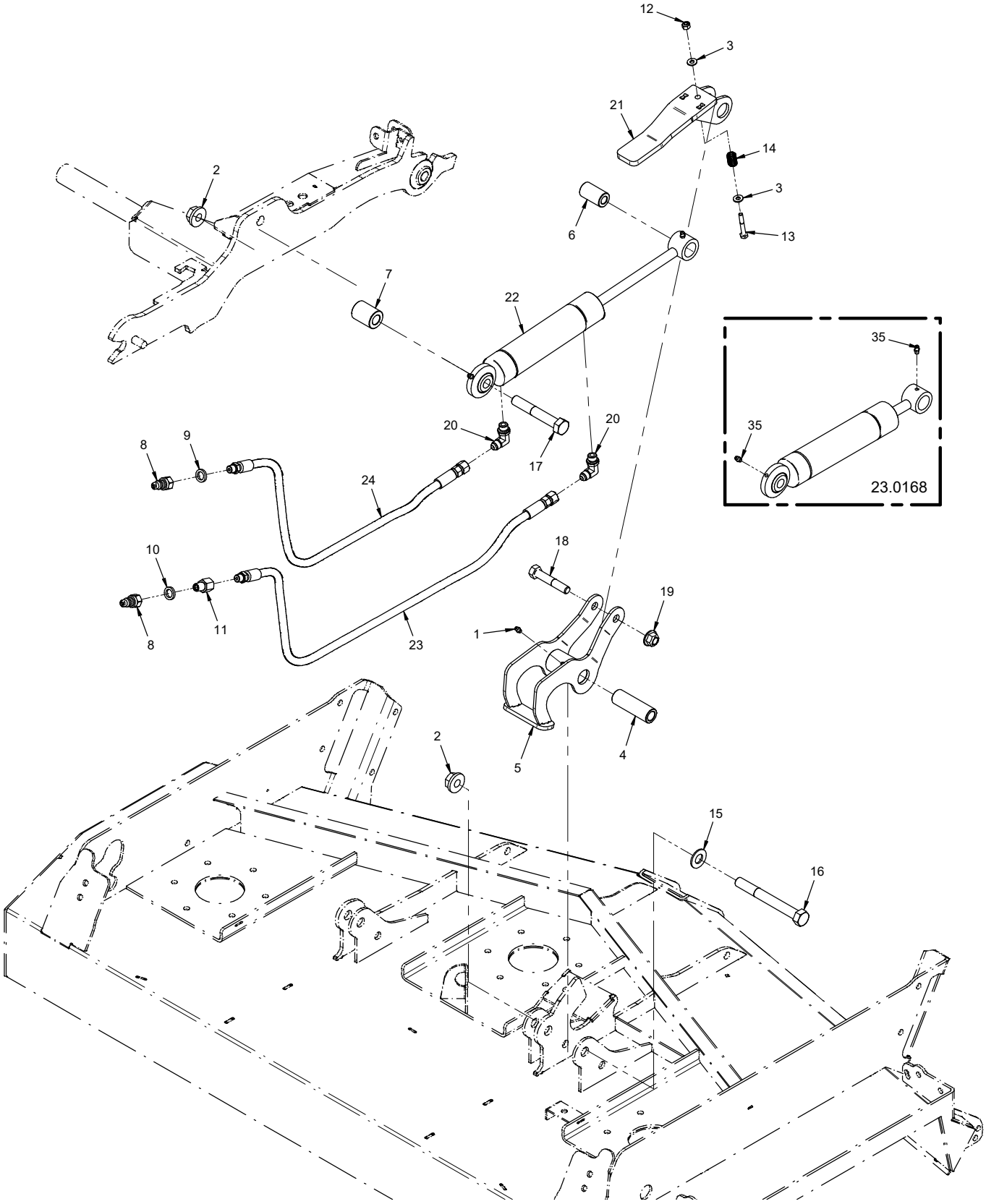

Use only original Ventrac replacement parts.

70.8163 & 70.8214 Hydraulic Flip Up Kit

REF.	PART NO.	DESCRIPTION	QTY.
1	29.GF0001	Grease Ftg, 1/4 SAE ST	1
2	99.E0094	Locknut, 5/8-11 Flanged Stover	2
3	95.04	Washer, Flat 1/4 SAE	2
4	64.1975	Bushing, .641 x 1.00 x 3.094L	1
5	64.1972	Bracket, Flip Up Rocker	1
6	64.1973	Bushing, .516ID X 1 OD X 1.75 L	1
7	64.1974	Bushing, .656 x 1.25 x 1.625L	1
8	23.0104	Coupler, Quick Male 1/4	2
9	05.0117	Washer, .544 ID x .817 x .14 Yel	1
10	05.0116	Washer, .544 ID x .817 x .14 Red	1
11	29.0092	Fitting, .025 Orifice 1/4 Pipe	1
12	99.A04N	Locknut, Nylon 1/4-20	1
13	90.0414	Bolt, 1/4-20 USS x 1-3/4	1
14	41.0108	Spring, Comp. .531 OD X .780 LG	1
15	95.10	Washer, Flat 5/8 SAE	1
16	90.1044	Bolt, 5/8-11 USS x 5-1/2	1
17	90.1032	Bolt, 5/8-11 USS x 4	1
18	90.0822	Bolt, 1/2-13 USS x 2-3/4	1
19	99.E0103	Nut, Locking Flange 1/2-13	1
20	25.6801-06-06	Fitting, 90 ME 3/8 x 3/8	2
21	70.8218	Kit, Belt Tensioner/Cylinder Lock (2 parts)	1
22	23.0168	Cylinder, 1-3/4” X 5-1/4”	1
23	20.0169	Hose, 1/4x38.00 SAE 100R17 AR	1
24	20.0166	Hose, 1/4x35.00 SAE 100R17 AR	1
35	29.GF0001	Grease Ftg, 1/4 SAE ST	2

Use only original Ventrac replacement parts.